REVISIONS					
MF	ZONE	LTR	DESCRIPTION	DATE	APPROVED

OTES:

FINISH 5.3.1.2 OF MIL-STD-171, EXCEPT PARA 3.6.1 AND 3.6.4 OF MIL-P-16232 SHALL NOT APPLY. ALL SURFACES SHALL BE COATED WITH A FILM OF OIL. WEIGHT PER UNIT AREA SHALL NOT APPLY.

MIL-W-13855 APPLY.

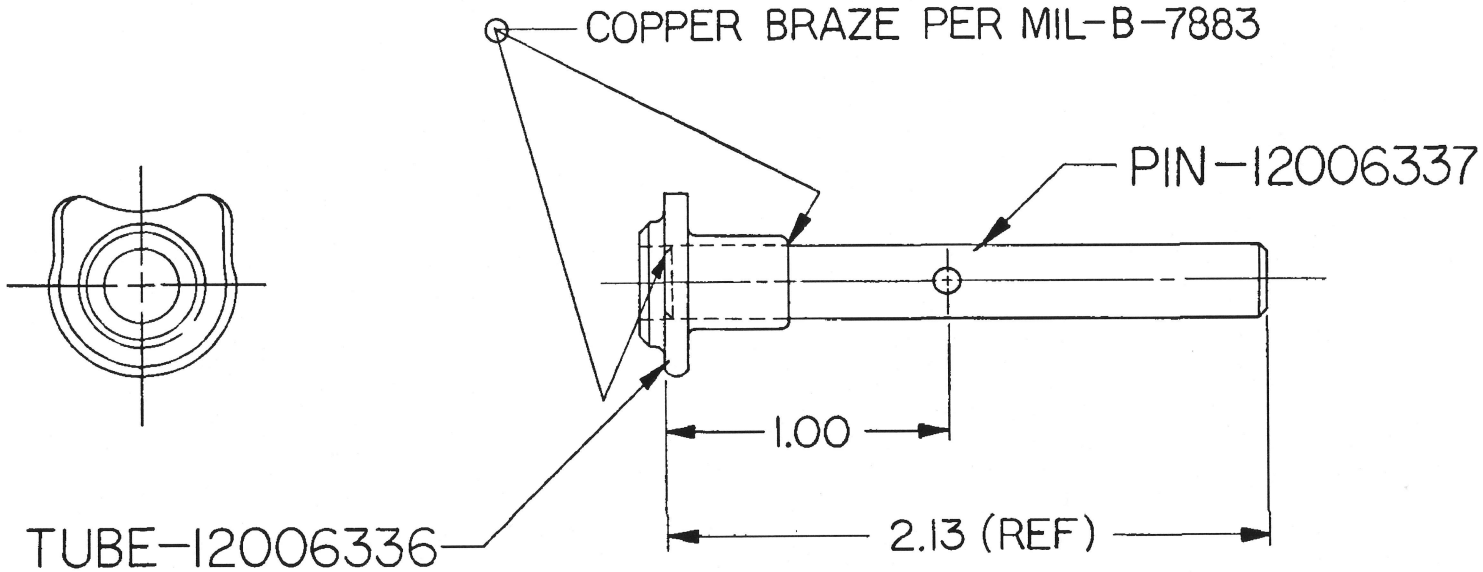

SEE PL-12006335

PART NO. 12006335

MECHANICAL PROPERTIES				UNLESS OTHERWISE SPECIFIED DIMENSIONS ARE IN INCHES	CONTRACT NO:	DEPT OF THE ARMY U.S. ARMY WEAPONS COMMAND ROCK ISLAND, ILLINOIS, 61201
YS MIN				TOLERANCES: ANGLES ± — 3 PLACE DECIMALS ± — 2 PLACE DECIMALS ± —	DATE 23 MAY 73	TUBE ASSEMBLY
YS MAX				MATERIAL	PREP R.L. Passig	
EL 2					CHK R.W. DeArmond	
RA					ENGR E. Winter	
BH		B12006331	PISTOL, M15		SUBMITTED R.A. Cole	SIZE 3 / CODE IDENT NO. 19204 / DRAWING NO. 12006335
RH		NEXT ASSY	USED ON	FINAL PROTECTIVE FINISH SEE NOTE 1	APPROVED R.S. Kenney	SCALE 2/1 / SHEET 1 OF 1
		APPLICATION				

EDITION OF 20 JUL 69 MAY BE USED

REVISIONS					
MF	ZONE	LTR	DESCRIPTION	DATE	APPROV

NOTES:

1. FINISH 125√ ALL OVER.
2. ALL EDGES SHALL BE BROKEN .005+.010 UNLESS OTHERWISE SPECIFIED.
3. MAKE FROM PART NO. 6008597, ALTER AS SHOWN. SELECT PART NO. 6008597 WITH MAX HOLE OF .270.
4. MIL-W-13855 APPLIES.

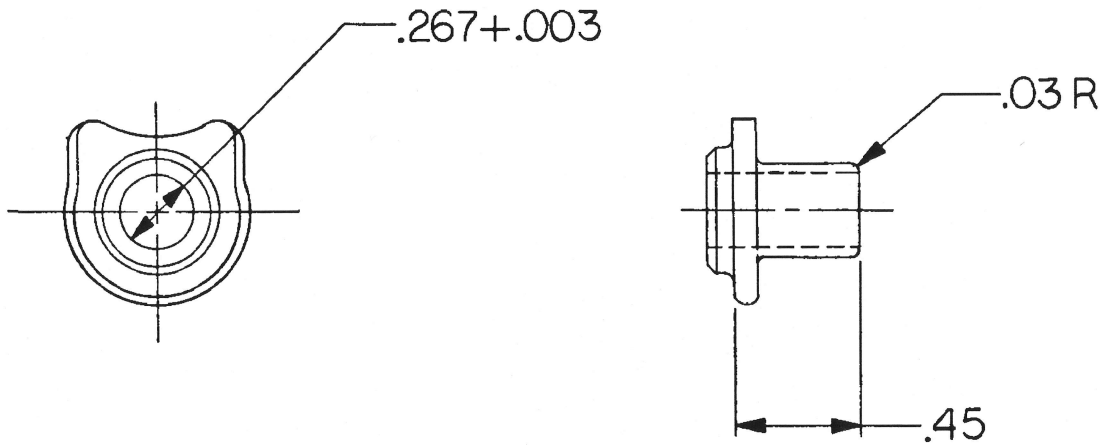

ALTERED ITEM DRAWING

PART NO. 12006336

MECHANICAL PROPERTIES				UNLESS OTHERWISE SPECIFIED DIMENSIONS ARE IN INCHES TOLERANCES: ANGLES ± — 3 PLACE DECIMALS ± — 2 PLACE DECIMALS ± .01	CONTRACT NO: DATE 23 MAY 73	DEPT OF THE ARMY ROCK ISLAND ARSENAL ROCK ISLAND, ILLINOIS, 61201
YS MIN					PREP R.L. Bessig	TUBE
YS MAX				MATERIAL —	CHK R.W. McArnand	
EL 2					ENGR E. Winter	
RA		B12006335	PISTOL, M15		SUBMITTED A. A. Cole	SIZE B / CODE IDENT NO. 19204 / DRAWING NO. 12006336
BH		NEXT ASSY	USED ON	FINAL PROTECTIVE FINISH —	APPROVED R. S. Henry	
RH		APPLICATION				SCALE 2/1 / SHEET 1 OF 1

AMSWE Form 403B 13 Nov 70

EDITION OF 29 JUL 69 MAY BE USED

NOTES:

1. STEEL, CMPSN 1018 THRU 1030, SPEC QQ-S-634.
2. FINISH $\sqrt{125}$ ALL OVER.
3. ALL EDGES SHALL BE BROKEN .005+.010 UNLESS OTHERWISE SPECIFIED.
4. MIL-W-13855 APPLIES.

REVISIONS					
MF	ZONE	LTR	DESCRIPTION	DATE	APPROV

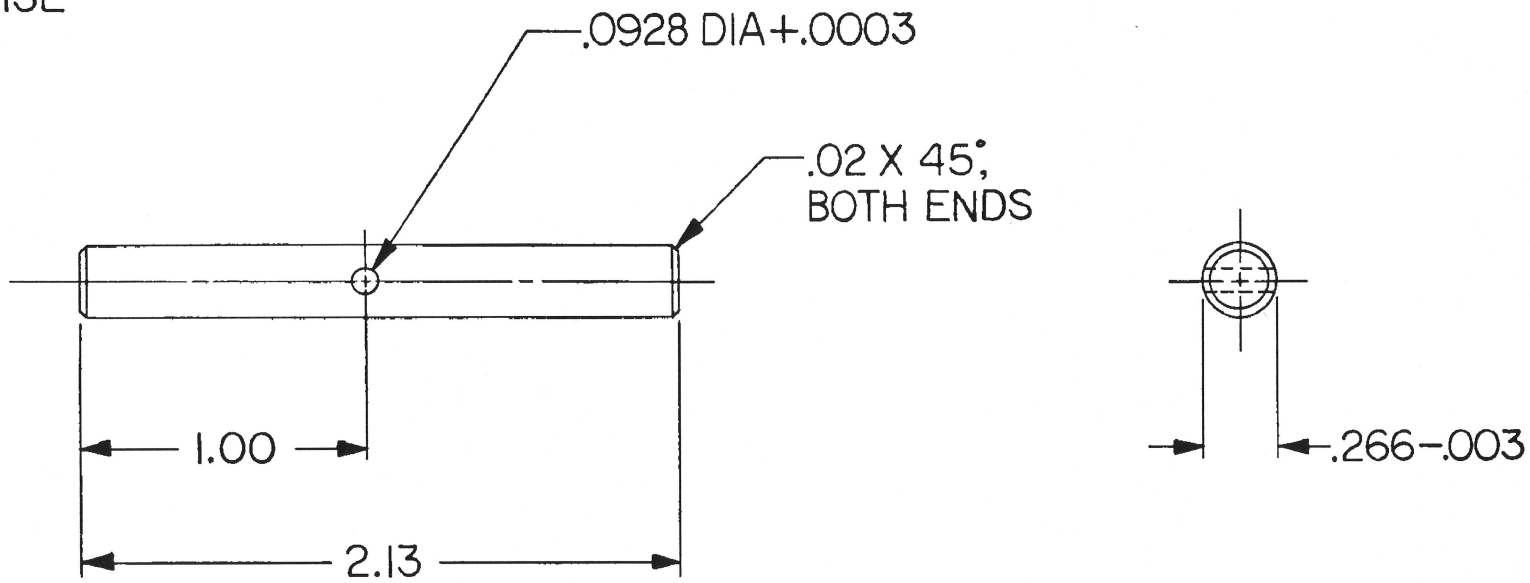

PART NO. 12006337

MECHANICAL PROPERTIES			
YP			
TS			
EL 2			
RA			
BH		B12006335	PISTOL, M15
RH		NEXT ASSY.	USED ON
		APPLICATION	

UNLESS OTHERWISE SPECIFIED DIMENSIONS ARE IN INCHES

TOLERANCES ON DECIMALS .XX ±.01 .XXX ±—

ANGLES ±1°

MATERIAL: SEE NOTE 1

HEAT TREATMENT: —

FINAL PROTECTIVE FINISH: —

ORIGINAL DATE OF DRAWING: 23 MAY 73

DRAFTSMAN	CHECKER
R.L. Perrig	R.W. de Armond
TRACER	CHECKER
ENGINEER	ENGINEER
E. Winter	

SUBMITTED: A. A. Cole

APPROVED: R. S. Henry

DEPT OF THE ARMY
ROCK ISLAND ARSENAL, ROCK ISLAND, ILL. 612

PIN

DWG SIZE	CODE IDENT NO.	
B	19204	12006337
SCALE 2/1	UNIT WT	SHEET 1 OF 1

SWERI FORM 40B. 1 MAR 67

REVISIONS				
MF	ZONE	LTR	DESCRIPTION	DATE
		A	HQR 30687-2	19 JUN 73

NOTES:

1. SOLDER SHALL NOT BE VISIBLE AFTER APPLICATION OF PROTECTIVE FINISH, SOLDER IN ACCORDANCE WITH MIL-S-6872.
2. FILL ENGRAVING WITH WHITE COLORED FILLER PER SPEC TT-F-325.
3. ALL EXTERNAL SURFACES TO BE ABRASIVE BLASTED USING 80 GRIT MATERIAL, UNLESS OTHERWISE SPECIFIED.
4. MIL-W-13855 APPLIES.

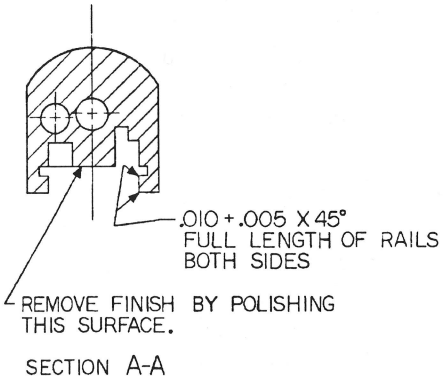

SECTION A-A

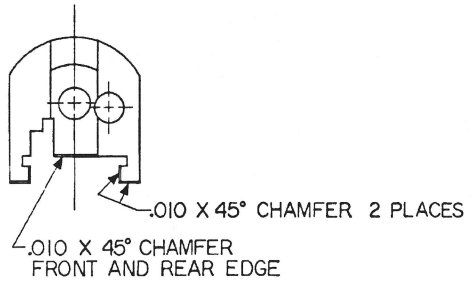

VIEW B-B

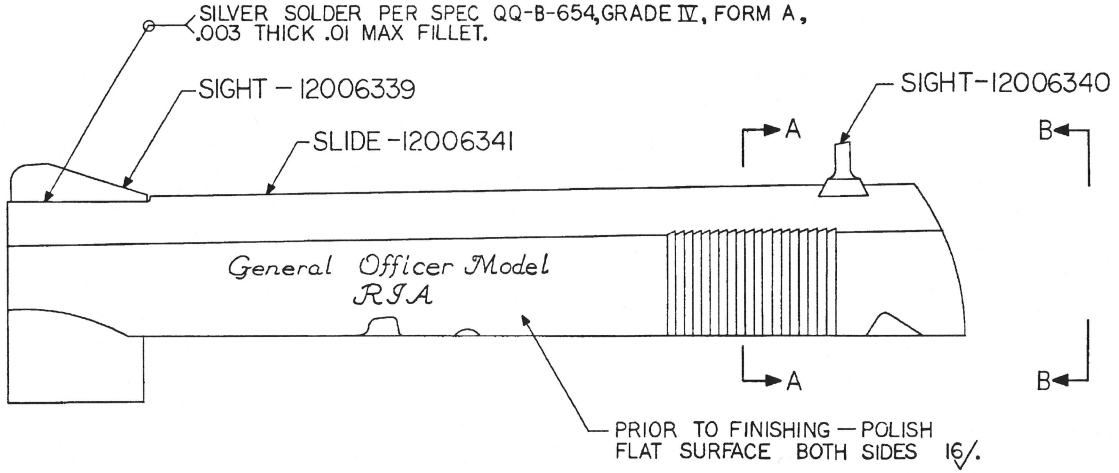

SEE PL 12006306

PART NO. 12006338

MECHANICAL PROPERTIES	
YS MIN	
YS MAX	
EL 2	
RA	
BH	
RH	

F12006306	PISTOL, M15
NEXT ASSY	USED ON
APPLICATION	

UNLESS OTHERWISE SPECIFIED DIMENSIONS ARE IN INCHES
TOLERANCES:
ANGLES ± 2°
3 PLACE DECIMALS ±.005
2 PLACE DECIMALS ± —

MATERIAL —

FINAL PROTECTIVE FINISH 3.3.1 OF MIL-STD-171

CONTRACT NO.

DATE 23 MAY 73

PREPARED A. Handley
CHECKED W. H. Schmidt
ENGINEER E. A. Wister
SUBMITTED N. A. Cole
APPROVED R. J. Hensel

DEPT OF THE ARMY
U.S. ARMY WEAPONS COMMAND
ROCK ISLAND, ILLINOIS, 6120

SLIDE ASSEMBLY

SIZE	CODE IDENT NO	DRAWING NO.
D	19204	120063

SCALE

SHEET

REVISIONS					
MF	ZONE	LTR	DESCRIPTION	DATE	APPROVED

NOTES

1. 125 FINISH ALL OVER.
2. STEEL, CMPSN 1015 THRU 1020, SPEC QQ-S-698.
3. MIL-W-13855 APPLIES.

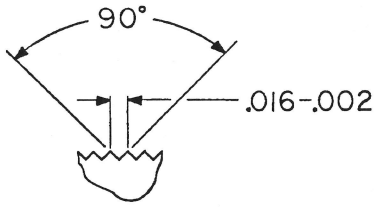

DETAIL A
SCALE 10/1

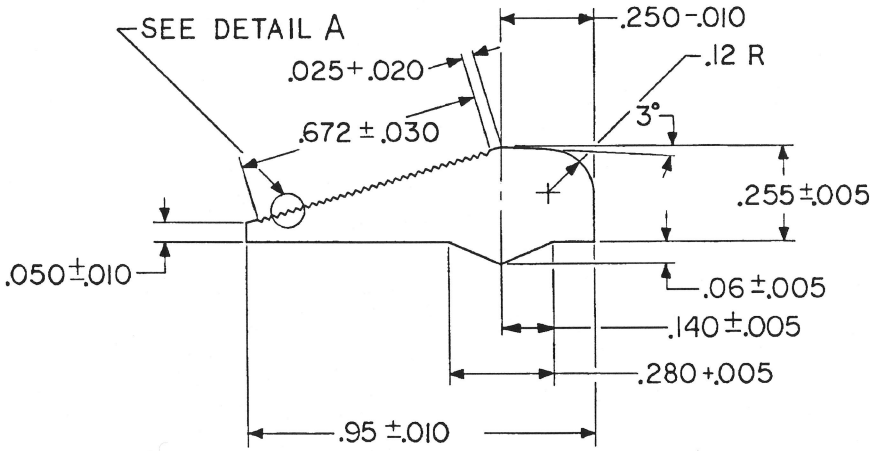

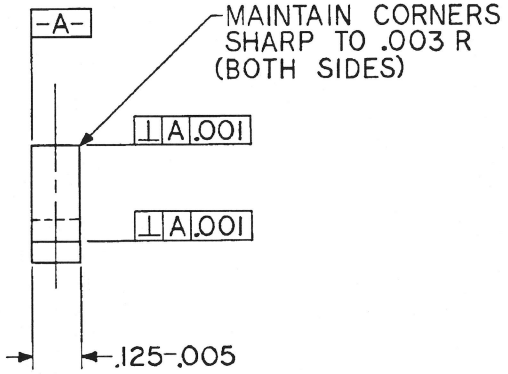

C 12006339

PART NO. 12006339

MECHANICAL PROPERTIES	
YS MIN	
YS MAX	
EL 2	
RA	
BH	
RH	

D12006338	PISTOL, M15
NEXT ASSY	USED ON
APPLICATION	

UNLESS OTHERWISE SPECIFIED DIMENSIONS ARE IN INCHES
TOLERANCES:
ANGLES ±1°
3 PLACE DECIMALS ±.—
2 PLACE DECIMALS ±.01

MATERIAL
SEE NOTE 2

FINAL PROTECTIVE FINISH

CONTRACT NO:

DATE 23 MAY 73

PREPARED A. Handley
CHECKED R. V. Edmond
ENGINEER E. Winter
SUBMITTED A. A. Cole
APPROVED L. S. Henry

DEPT OF THE ARMY
U.S. ARMY WEAPONS COMMAND
ROCK ISLAND, ILLINOIS, 61201

SIGHT, FRONT

SIZE	CODE IDENT NO.	DRAWING NO.
C	19204	12006339

SCALE 4/1 SHEET 1 OF 1

NOTES:

1. FINISH 125√ ALL OVER.
2. ALL EDGES SHALL BE BROKEN .005+.010 UNLESS OTHERWISE SPECIFIED.
3. A. STEEL, CMPSN 1018 THRU 1020, SPEC QQ-S-631 OR SPEC QQ-S-634.
   OR
   B. INVESTMENT CASTING: STEEL, CMPSN 1C8620, MIL-S-22141.
4. CLASSIFICATION AND INSPECTION OF INVESTMENT CASTING SHALL BE IN ACCORDANCE WITH CLASS 1B, GRADE A, MIL-C-6021.
5. EXTRA MATERIAL IS PROVIDED ON THESE CORNERS FOR USE IN WORN SLIDES.
6. MIL-W-13855 APPLIES.

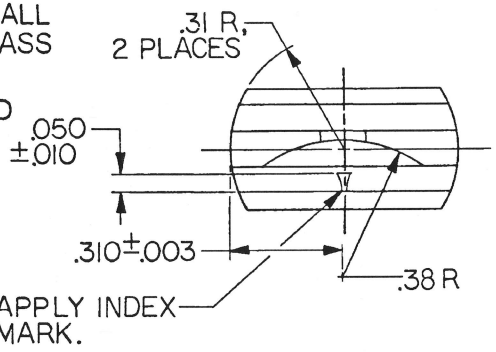

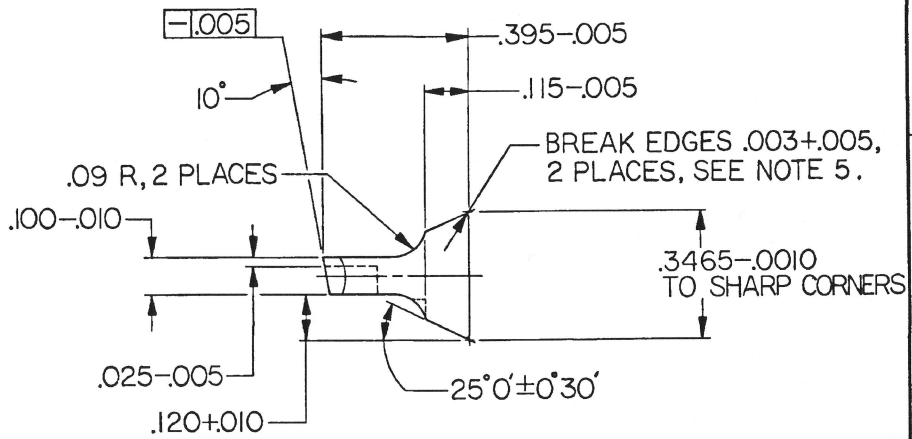

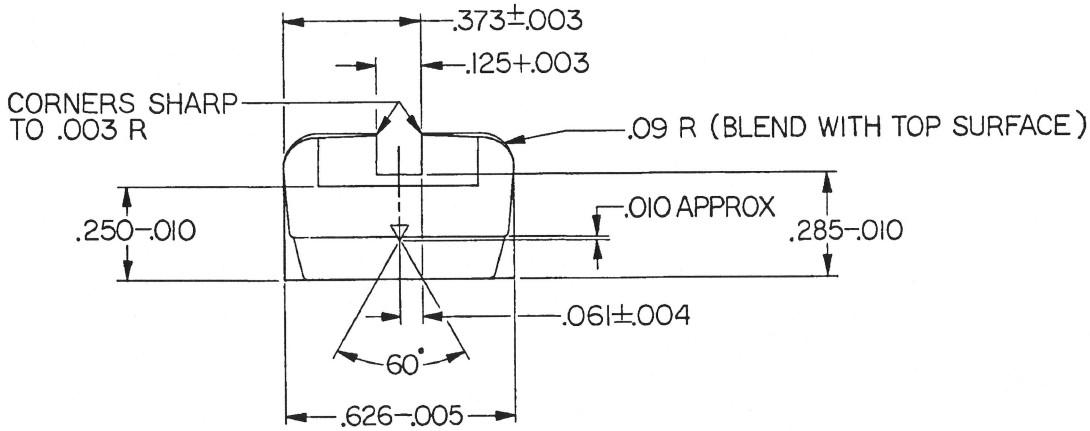

REVISIONS					
MF	ZONE	LTR	DESCRIPTION	DATE	APPROVED

PART NO. 12006340

MECHANICAL PROPERTIES			
YS MIN			
YS MAX			
EL 2			
RA			
BH			
RH			

NEXT ASSY	USED ON
D12006338	PISTOL, M15

APPLICATION

UNLESS OTHERWISE SPECIFIED DIMENSIONS ARE IN INCHES
TOLERANCES:
ANGLES ± 1°
3 PLACE DECIMALS ± —
2 PLACE DECIMALS ±.02

MATERIAL: SEE NOTE 3

FINAL PROTECTIVE FINISH

CONTRACT NO:

DATE 23 MAY 73

PREPARED R.L. Berry
CHECKED R.W. De Armond
ENGINEER E. Winter
SUBMITTED A. A. Cole
APPROVED R. S. Henry

DEPT OF THE ARMY
U.S. ARMY WEAPONS COMMAND
ROCK ISLAND, ILLINOIS, 61201

SIGHT, REAR

SIZE	CODE IDENT NO.	DRAWING NO.
C	19204	12006340

SCALE 4/1 SHEET 1 OF 1

C12006340

REVISIONS				
MF	ZONE	LTR	DESCRIPTION	DATE

NOTES:

1. FINISH 125 ALL OVER.
2. BREAK ALL SHARP EDGES .005+.010.
3. MAKE FROM PART NO. 7790314, ALTER AS SHOWN.
4. MODERNE CURSIVE STYLE ENGRAVING. MASTER COPY TYPE-GORTON MACHINE CORP. OR EQUIVALENT ENGRAVING TO BE .010 WIDE X .010 DEEP X 60° INCLUDED ANGLE.

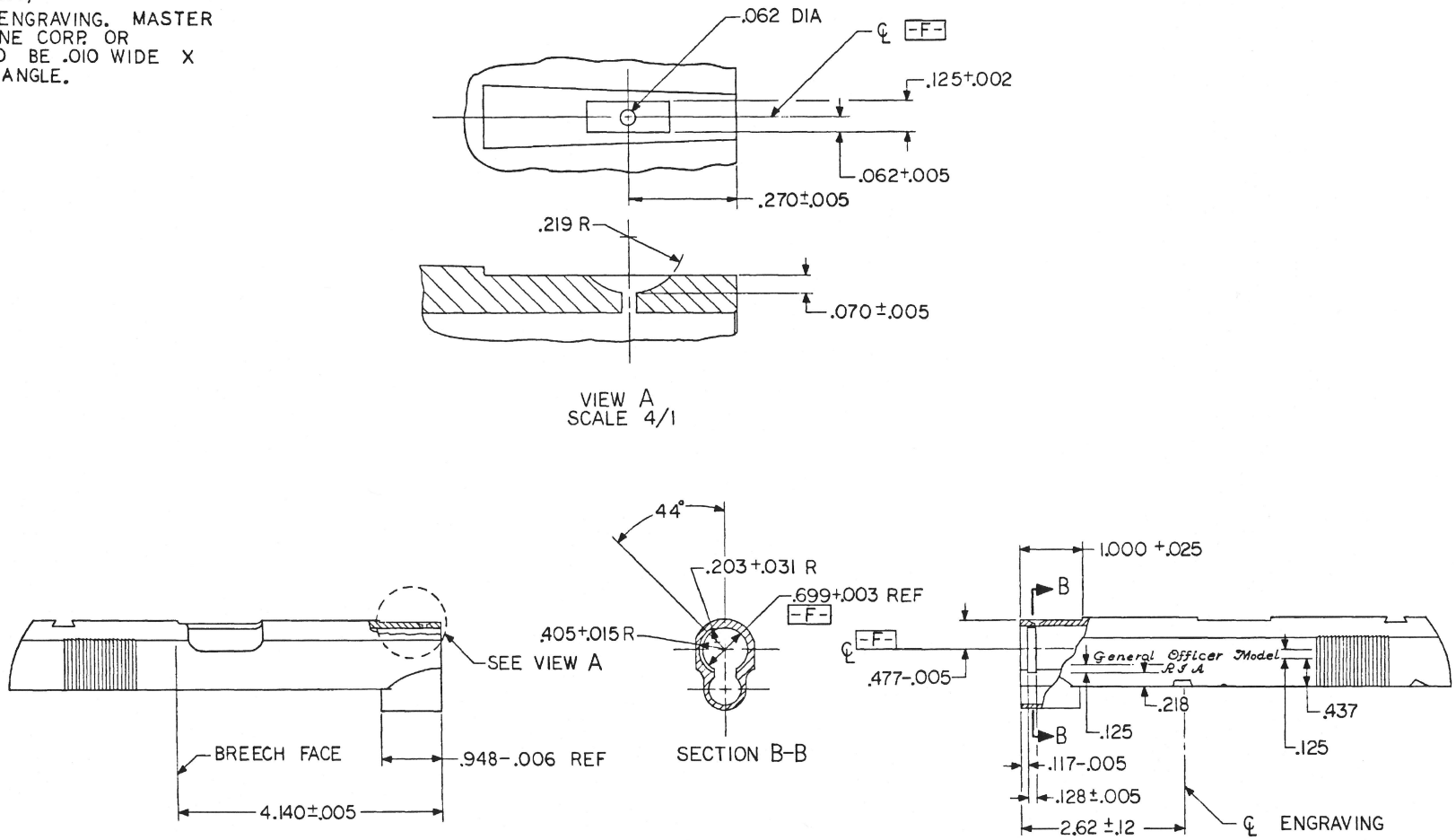

ALTERED ITEM DRAWING

PART NO. 12006341

MECHANICAL PROPERTIES				UNLESS OTHERWISE SPECIFIED DIMENSIONS ARE IN INCHES TOLERANCES: ANGLES ± 1° 3 PLACE DECIMALS ±.010 2 PLACE DECIMALS ± —	CONTRACT NO:	DEPT OF THE ARMY U.S. ARMY WEAPONS COMMAND ROCK ISLAND, ILLINOIS, 6120
YS MIN				MATERIAL	DATE 23 MAY 73	SLIDE
YS MAX					PREPARED	
EL 2					CHECKED	
RA					ENGINEER	
BH		D 12006338	PISTOL M15		SUBMITTED A. A. Cole	SIZE D · CODE IDENT NO. 19204 · DRAWING NO. 1200634
RH		NEXT ASSY	USED ON	FINAL PROTECTIVE FINISH	APPROVED R. S. Henry	SCALE 1/1 · SHEET
		APPLICATION				

NOTES:

1. STAKE FOR PERMANENT RETENTION.
2. LOCATE AND DRILL HOLE FOR PIN-5013203 WITH EJECTOR-11010485 IN PLACE AS SHOWN.
3. MIL-W-13855 APPLIES.

REVISIONS				
MF	ZONE	LTR	DESCRIPTION	DATE

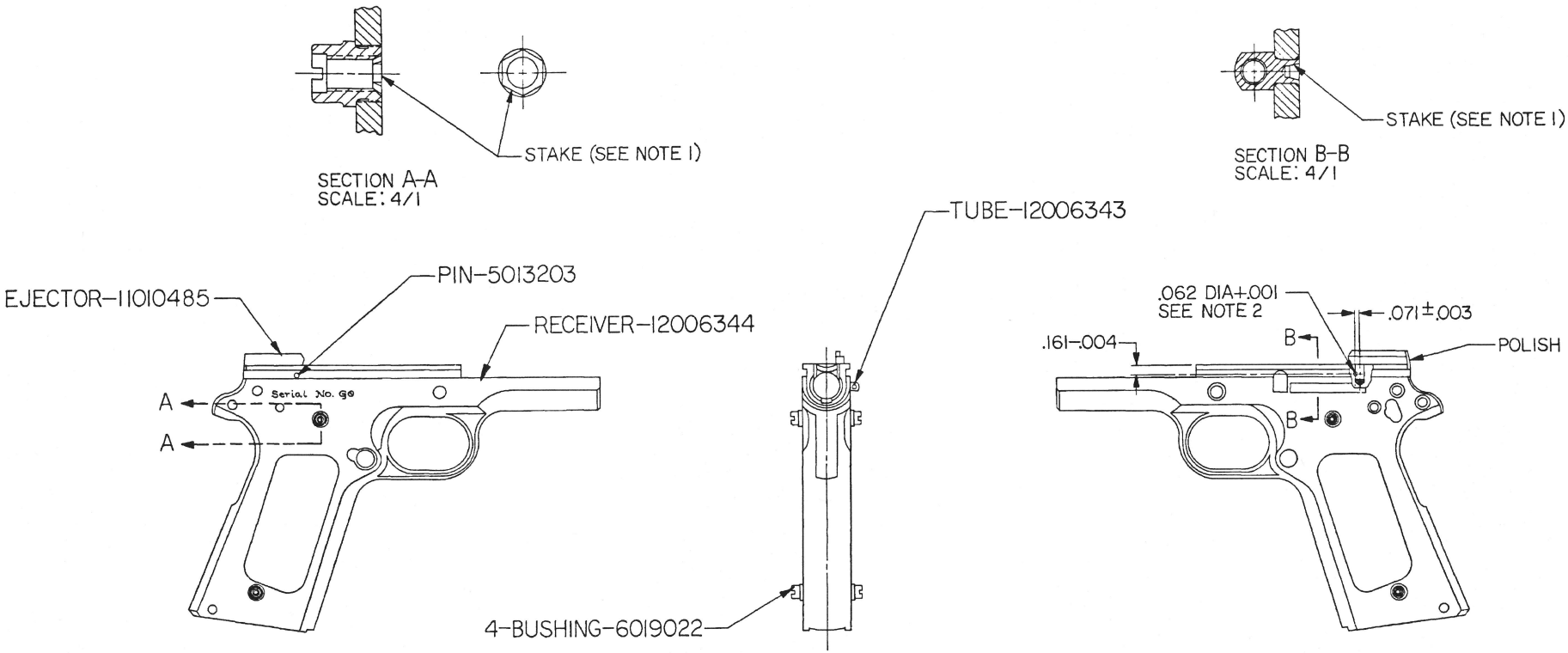

SEE PL-12006342

PART NO. 12006342

MECHANICAL PROPERTIES				UNLESS OTHERWISE SPECIFIED DIMENSIONS ARE IN INCHES TOLERANCES: ANGLES ± — 3 PLACE DECIMALS ± — 2 PLACE DECIMALS ± —	CONTRACT NO:	DEPT OF THE ARMY U.S. ARMY WEAPONS COMMAN ROCK ISLAND, ILLINOIS, 612
YS MIN					DATE 23 MAY 73	RECEIVER ASSEM
YS MAX				MATERIAL	PREPARED R.L. Passig	
EL 2					CHECKED	
RA					ENGINEER	
BH		F12006306	PISTOL, M15		SUBMITTED A.A. Cole	SIZE D / CODE IDENT NO. 19204 / DRAWING NO. 12006342
RH		NEXT ASSY	USED ON	FINAL PROTECTIVE FINISH	APPROVED R.S. Hewey	SCALE 1/1 / SHEET
		APPLICATION				

NOTES:

1. MAKE FROM PART NO. 6008594, ALTER AS SHOWN.
2. MIL-W-13855 APPLIES.
3. FINISH 3.3.1 OF MIL-STD-171.

REVISIONS					
MF	ZONE	LTR	DESCRIPTION	DATE	APPRO

POLISH 16/ BOTH SIDES AND TOP PRIOR TO APPLICATION OF PROTECTIVE FINISH

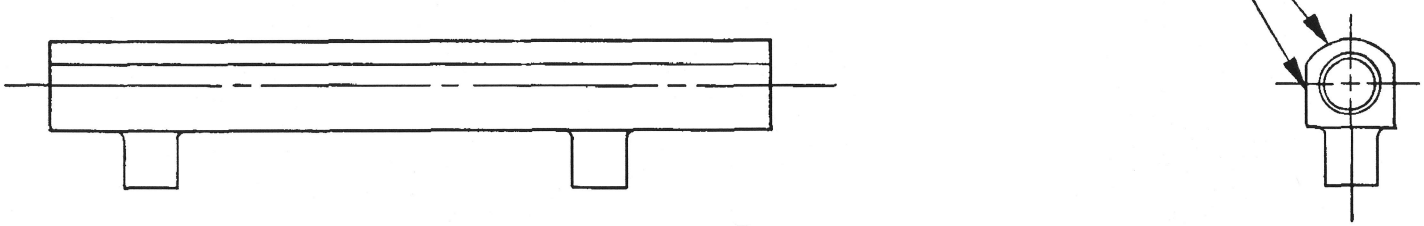

ALTERED ITEM DRAWING

PART NO. 12006343

MECHANICAL PROPERTIES				UNLESS OTHERWISE SPECIFIED DIMENSIONS ARE IN INCHES	CONTRACT NO.	DEPT OF THE ARMY U.S. ARMY WEAPONS COMMAND ROCK ISLAND, ILLINOIS, 61201
YS MIN				TOLERANCES: ANGLES ± — 3 PLACE DECIMALS ± — 2 PLACE DECIMALS ± —	DATE 23 MAY 73	TUBE, PLUNGER
YS MAX				MATERIAL	PREP R.L. Bessig	
EL 2					CHK [illegible]	
RA					ENGR E. Winter	
BH		D12006342	PISTOL, M15		SUBMITTED A. A. Cole	SIZE B / CODE IDENT NO. 19204 / DRAWING NO. 12006343
RH		NEXT ASSY	USED ON	FINAL PROTECTIVE FINISH SEE NOTE 3	APPROVED R. S. Henry	SCALE 4/1 / SHEET 1 OF 1
		APPLICATION				

REVISIONS					
MF	ZONE	LTR	DESCRIPTION	DATE	APPROVED
M	-	A	SEE ERR HQR 30687-2	19 JUN 73	E Winter

NOTES:

1. MAKE FROM PART NO. 6535359, ALTER AS SHOWN.
2. SERIAL NO. ENGRAVING TO BE MODERNE CURSIVE STYLE. MASTER COPY TYPE—GORTON MACHINE CORP. OR EQUIVALENT. ENGRAVING TO BE .010 DEEP X 60° INCLUDED ANGLE.
3. FILL SERIAL NO. ENGRAVING WITH WHITE COLORED FILLER PER SPEC TT-F-325.
4. MIL-W-13855 APPLIES.
5. FINISH 3.3.1 OF MIL-STD-171.

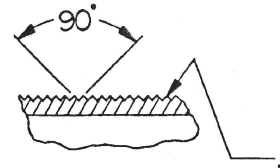

SECTION B-B
(ROTATED 17° CCW)
SCALE: 2/1

.05 CHORDAL PITCH, DEPTH TO PRODUCE PEAKS SHARP TO WITHIN .005

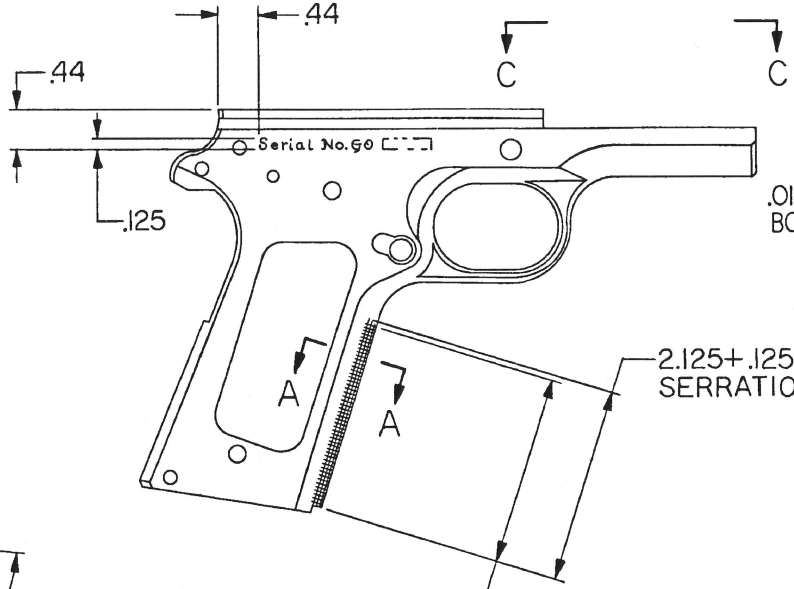

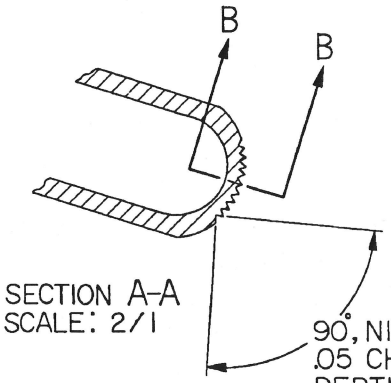

SECTION A-A
SCALE: 2/1

90°, NINE FULL POINTS
.05 CHORDAL PITCH, MIN.
DEPTH TO PRODUCE PEAKS SHARP TO WITHIN .005

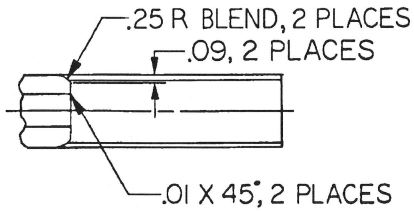

VIEW C-C

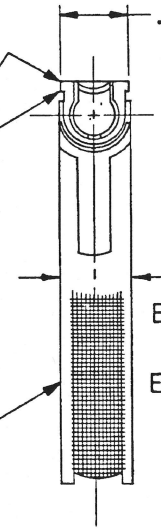

PRIOR TO FINISHING-SURFACE GRIND SIDE TO REMOVE EXISTING SERIAL NO., POLISH FLAT SURFACES BOTH SIDES 16/, ABRASIVE BLAST ALL OTHER SURFACES USING 80 GRIT MATERIAL EXCEPT SERRATED GRIP SURFACE.

ALTERED ITEM DRAWING
PART NO. 12006344

MECHANICAL PROPERTIES	
YS MIN	
YS MAX	
EL 2	
RA	
BH	
RH	

NEXT ASSY	USED ON
D12006342	PISTOL, M15

APPLICATION

UNLESS OTHERWISE SPECIFIED DIMENSIONS ARE IN INCHES
TOLERANCES:
ANGLES ± 2°
3 PLACE DECIMALS ±.020
2 PLACE DECIMALS ±.02

MATERIAL

FINAL PROTECTIVE FINISH
SEE NOTE 5

CONTRACT NO:

DATE 23 MAY 73

PREPARED R.L. Boig
CHECKED R.W. Dellmund
ENGINEER E. Winter
SUBMITTED A. A. Cole
APPROVED R. S. Henry

DEPT OF THE ARMY
U.S. ARMY WEAPONS COMMAND
ROCK ISLAND, ILLINOIS, 61201

RECEIVER

SIZE	CODE IDENT NO.	DRAWING NO.
C	19204	12006344

SCALE 1/1 SHEET 1 OF 1

C12006344

NOTES:

1. MIL-W-13855 APPLIES.

REVISIONS					
MF	ZONE	LTR	DESCRIPTION	DATE	APPR

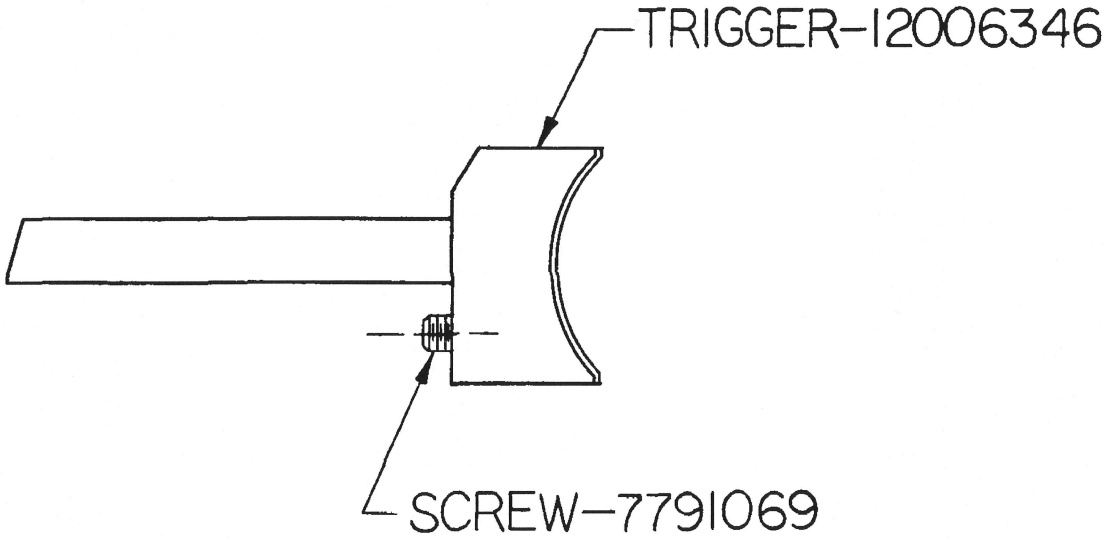

SEE PL-12006345

PART NO. 12006345

MECHANICAL PROPERTIES	
YS MIN	
YS MAX	
EL 2	
RA	
BH	
RH	

NEXT ASSY	USED ON
F12006306	PISTOL, M15

APPLICATION

UNLESS OTHERWISE SPECIFIED DIMENSIONS ARE IN INCHES
TOLERANCES:
ANGLES ± ——
3 PLACE DECIMALS ± ——
2 PLACE DECIMALS ± ——

MATERIAL

FINAL PROTECTIVE FINISH

CONTRACT NO:
DATE 8 MAY 73
PREP K
CHK R.W. DeAmond
ENGR E. Winter
SUBMITTED E.A. Winter
APPROVED R. S. Henry

DEPT OF THE ARMY
U.S. ARMY WEAPONS COMMAND
ROCK ISLAND, ILLINOIS, 61201

TRIGGER ASSEMBLY

SIZE	CODE IDENT NO.	DRAWING NO.
B	19204	12006345

SCALE 2/1 SHEET 1 OF